CANDY LED

Brighten your life !

Catalogue 2023

www.candyled.com

P R E S E N T A T I O N

Derived from the world of Information Technologies, networks and Internet, the Group 3S, leading its field, gets into the Cleantech industries in the realm of electronics and electroluminescence under the Candyled brand.

This first investment in the world of Cleantech is part of the LED lighting sector, where technological breakthroughs in progress have already increased the efficiency of conventional lighting tenfold to reach today more than 160 lumens per watt.

At the crossroads of the Mediterranean, Candy Led manufactures, at its plant ideally located in the south of Tunis, the heart of LED lighting technology: the COB module (Chip On Board).

Backed by an in-house engineering department, Candyland has the ability to design, prototyping and mass-manufacturing any LED lighting fixture, whether under its own brand or in white label for manufacturers, integrators or distributors.

Our entry into the closed class of COB-LED modules manufacturers, aims firstly to participate in the international evolution of this new industry, then to further improve the performance of this technology and to move up the value chain of this sector, both in electronics and in semiconductor chemistry. In view of our pedigree IT, our contribution should impact the embedded intelligence promised by the Internet of Things (IoT).

Since technology is of no value and importance unless it offers the most widespread benefit possible, our ultimate objective is to democratize the use of LED lighting in the Mediterranean basin, the Middle East and Africa in order to make it accessible to everyone. As first factory in this field in Africa, the Middle East and the Arab world, we naturally aspire to be among the leading suppliers of LED lighting in this geographical area.

WHY CANDYLED?

The **LED (Lighting Emmiting Diode)** is an electronic component of the family of Optoelectronic components capable of emitting light when an electric current flows through it.

Appeared in 1962, the LED **is one of the most powerful, economic and durable light sources.**

Many now consider it as the most revolutionary invention in over hundred years. In fact, the applications integrating LEDs are almost infinite...

THE NUMEROUS BENEFITS OF CANDYLED LIGHTING SYSTEM

Our LED lighting solutions have significant strengths for saving energy, reducing costs of ownership and maintenance:

Compliance with standards	Warranty	Lifespam
CE	Jusqu'à Up to 5 ans years garantie warranty	Durée de vie 30 000h+ Lifetime
Compliance with the highest quality and safety standards, including European standards	Up to 5 years warranty for street lights & professional lighting	Street Lights and professionnal lighting lifetime is 100 000H+
Colours rendering	**Security**	**Energetic efficiency**
CRI ≥90	Hg 0% Mercury Free, Pb 0% Lead Free, UV, IR	UP TO 90% Energy saving
Good colour rendering	Contains neither Mercury nor Lead. No Ultraviolet (UV) or Infrared emission	Up to 90% energy saving
Instant ignition	**Luminous efficiency**	**Color temperature**
100 % 0 sec	160 lm / W	1000 2000 3000 4000 5000 6000 7000 8000 9000
100% instant lighting	Up to 160 Lumens per Watt	Wide range of color temperatures from warm white to cool white

B U L B S

Thanks to their **wide radiation angle**, these bulbs are ideal for **general lighting** by creating a friendly atmosphere in your area or room.

This range offers **immediate energy savings, long life and excellent value for money.**

APPLICATIONS

- General lighting
- Reception area, Rooms, halls & corridors, toilets
- Hotels, restaurants, bars, cafes, museums, shops
- Exhibition space & shops
- Outdoor use (only in suitable luminaires)

BENEFITS

- Quick ROI
- Significant energy savings (up to 80% compared to conventional lamps)
- Lifespan: 30 000 H+
- Easy installation: Standard base E14, E27 & B22
- Alternatives to conventional lighting
- Wide choice of color temperature (3 000K, 4 000K & 6 500K)
- Instant ignition

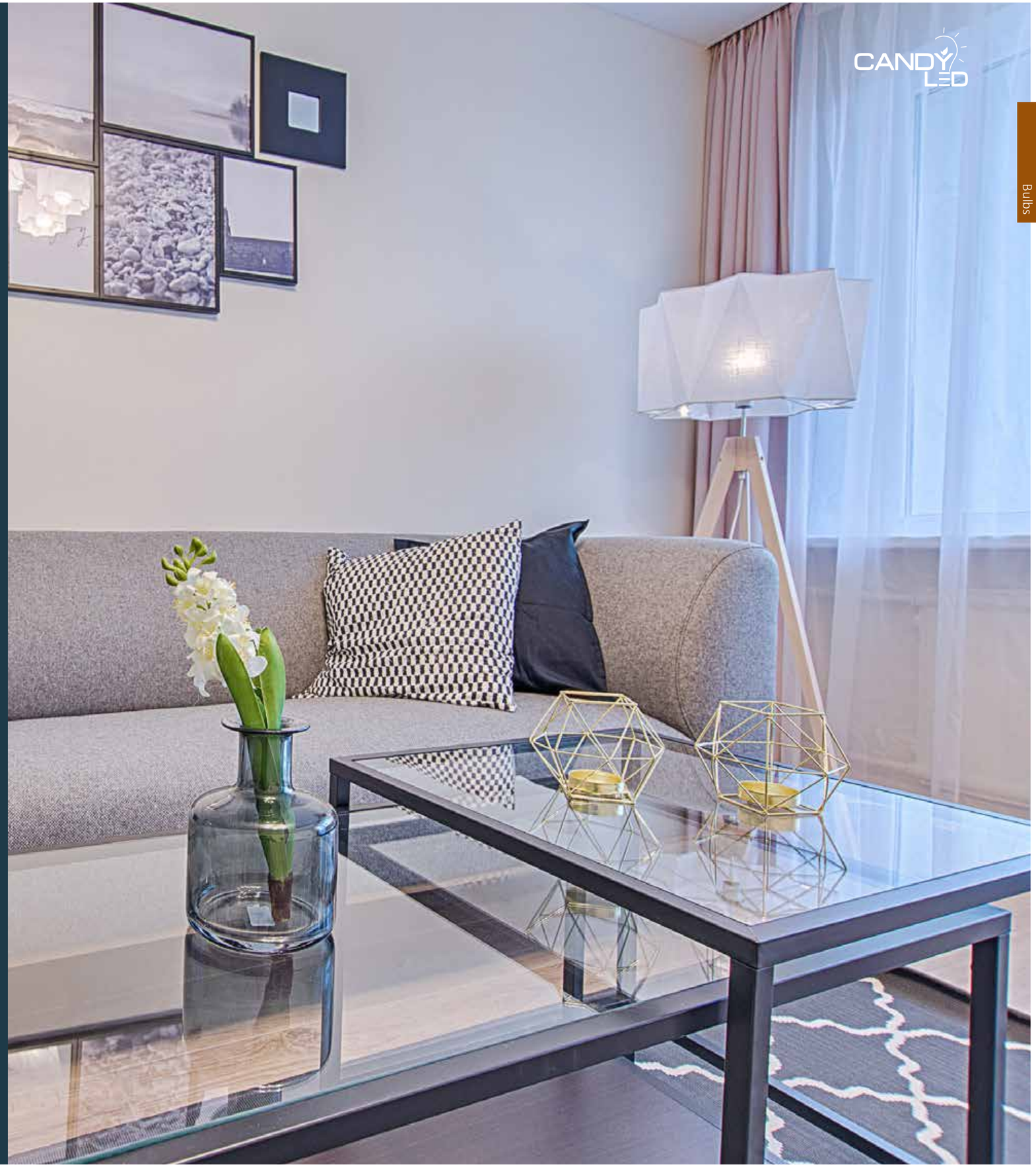

B U L B S

4W 230V SMD	5W 230V SMD	6W 230V SMD	9W 230V SMD	12W 230V SMD	15W 230V SMD	30W 230V SMD	40W 230V SMD

	W						d [mm]	K	Lm	References
4W 230V 150°	4	180-260V AC 50Hz	E14	150°	A++	30 000H+	Ø37-106	3 000 4 000 6 500	400	B004D4J4 B004D4N4 B004D4B4
5W 230V 230°	5	180-260V AC 50Hz	E27	230°	A+	30 000H+	Ø45-82	3 000 4 000 6 500	500	L005D5J1 L005D5N1 L005D5B1
6W 230V 230°	6	180-260V AC 50Hz	E27	230°	A+	30 000H+	Ø55-100	3 000 4 000 6 500	800	L006D5J3 L006D5N3 L006D5B3
9W 230V 230°	9	180-260V AC 50Hz	E27 & B22	230°	A+	30 000H+	Ø60-118	3 000 4 000 6 500	1100	L009D5J3 L009D5N3 L009D5B3
12W 230V 230°	12	180-260V AC 50Hz	E27	230°	A+	30 000H+	Ø65-130	3 000 4 000 6 500	1300	L012D5J2 L012D5N2 L012D5B2
15W 230V 230°	15	180-260V AC 50Hz	E27 & B22	230°	A+	30 000H+	Ø70-134	3 000 4 000 6 500	1800	L015D5J3 L015D5N3 L015D5B3
30W 230V PF>0.9	30	180-260V AC 50Hz	E27	165°	A+	30 000 h+	Ø100-180	4000 6500	3000	L030D5N1 L030D5B1
40W 230V PF>0.9	40	180-260V AC 50Hz	E27	165°	A+	30 000 h+	Ø125-216	4000 6500	4200	L040D5N1 L040D5B1

CANDLE 4 W - 230V AC

=40w

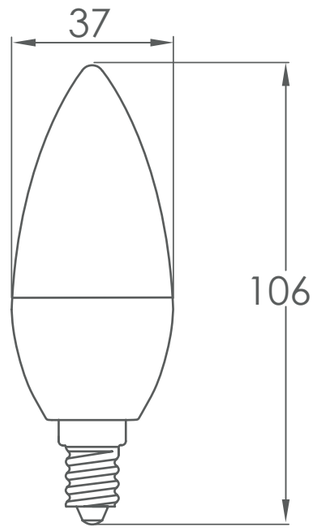

4W LED · 180-260V AC 50Hz · E14 · 400 LUMENS · CRI ≥80 · IP40 · IK06 · PF >0,5

CHARACTERISTICS:

Power	Voltage	Cap-Base	Luminous Flux	Beam Angle
4 W	180-260V AC	E14	400 Lumens	150°

Energetic Class	Lifespan	Dimensions
A++	30 000 h+	Ø 37 mm x 106 mm

TO ORDER:

References	Bar code	Colours temperatures
B004D4J4	6193102803342	Warm white 3 000k
B004D4N4	6193102803359	Neutral white 4 000k
B004D4B4	6193102803366	Cold white 6 500k

Unit by box	Box by pallets	Units by pallets
100	72	7 200

LED SMD Series

BULB 5W - 230V AC

=60w

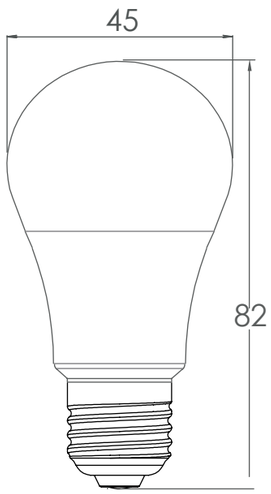

5W LED | 180-260V AC 50Hz | E27 | 500 LUMENS | CRI ≥80 | IP40 | IK06 | PF >0,5

CHARACTERISTICS:

Power	Voltage	Cap-Base	Luminous Flux	Beam Angle
5 W	180-260V AC	E27	500 Lumens	230°

Energetic Class	Lifespan	Dimensions
A+	30 000 h+	Ø 45 mm x 82 mm

TO ORDER:

References	Bar code	Colours temperatures
L005D5J1	6193102803373	Warm white 3 000k
L005D5N1	6193102803380	Neutral white 4 000k
L005D5B1	6193102803397	Cold white 6 500k

Unit by box	Box by pallets	Units by pallets
50	36	1 800

LED SMD Series

BULB 6W - 230V AC

= 60 w

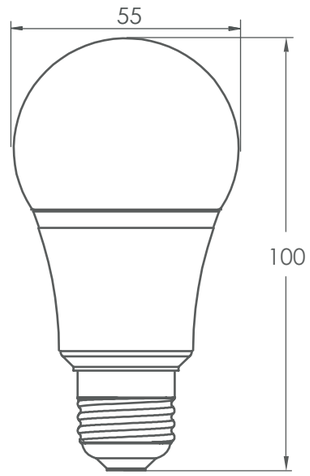

6W LED | 180-260V AC 50Hz | E27 | 800 LUMENS | CRI ≥80 | IP40 | IK06 | PF >0,5

CHARACTERISTICS:

Power	Voltage	Cap-Base	Luminous Flux	Beam Angle
6 W	180-260V AC	E27	800 Lumens	230°

Energetic Class	Lifespan	Dimensions
A+	30 000 h+	Ø 55 mm x 100 mm

TO ORDER:

References	Bar code	Colours temperatures
L006D5J3	6193102803205	Warm white 3 000k
L006D5N3	6193102803212	Neutral white 4 000k
L006D5B3	6193102803229	Cold white 6 500k

Unit by box	Box by pallets	Units by pallets
50	36	1 800

LED SMD Series

BULB 9W - 230V AC

=90 w

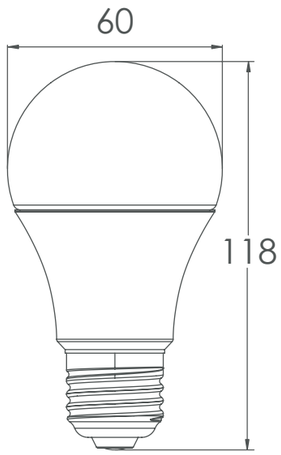

9W LED | 180-260V AC 50Hz | E27 | 1100 LUMENS | CRI ≥80 | IP40 | IK06 | PF >0,5

CHARACTERISTICS:

Power	Voltage	Cap-Base	Luminous Flux	Beam Angle
9 W	180-260V AC	E27 & B22	1 100 Lumens	230°

Energetic Class	Lifespan	Dimensions
A+	30 000 h+	Ø 60 mm x 118 mm

TO ORDER:

References	Bar code	Colours temperatures
L009D5J3	6193102801454	Warm white 3 000k
L009D5N3	6193102800839	Neutral white 4 000k
L009D5B3	6193102801447	Cold white 6 500k

Unit by box	Box by pallets	Units by pallets
50	36	1 800

LED SMD Series

BULB 12W - 230V AC

=100 w

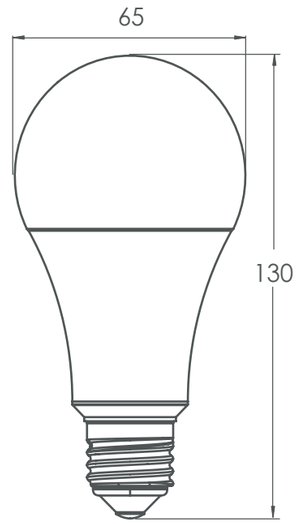

12W LED | 220-240V AC 50Hz | E27 | 1300 LUMENS | CRI ≥80 | IP40 | IK06 | PF >0,5

CHARACTERISTICS:

Power	Voltage	Cap-Base	Luminous Flux	Beam Angle
12 W	180-260V AC	E27	1 300 Lumens	230°

Energetic Class	Lifespan	Dimensions
A+	30 000 h+	Ø 65 mm x 130 mm

TO ORDER:

References	Bar code	Colours temperatures
L012D5J2	6193102803083	Warm white 3 000k
L012D5N2	6193102803090	Neutral white 4 000k
L012D5B2	6193102803106	Cold white 6 500k

Unit by box	Box by pallets	Units by pallets
50	36	1 800

LED SMD Series

BULB 15W - 230V AC

=120w

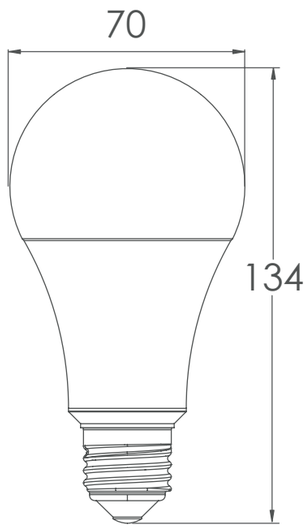

15W LED | 180-260V AC 50Hz | E27 | 1800 LUMENS | CRI ≥80 | IP40 | IK06 | PF >0,5

CHARACTERISTICS:

Power	Voltage	Cap-Base	Luminous Flux	Beam Angle
15 W	180-260V AC	E27 & B22	1 800 Lumens	230°

Energetic Class	Lifespan	Dimensions
A+	30 000 h+	Ø 70 mm x 134 mm

TO ORDER:

References	Bar code	Colours temperatures
L015D5J3	6193102801430	Warm white 3 000k
L015D5N3	6193102800846	Neutral white 4 000k
L015D5B3	6193102801423	Cold white 6 500k

Unit by box	Box by pallets	Units by pallets
50	36	1 800

Series LED SMD

BULB 30W - 230V AC

=300w

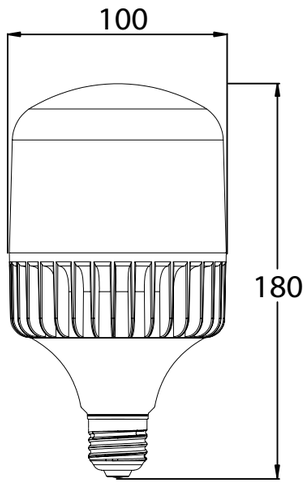

30W LED | 180-260V AC 50Hz | E27 | 3000 LUMENS | CRI ≥80 | IP40 | IK06 | PF >0,9

CHARACTERISTICS:

Power	Voltage	Cap-Base	Luminous Flux	Beam Angle
30 W	180-260V AC	E27	3 000 Lumens	165°

Energetic Class	Lifespan	Dimensions
A+	30 000 h+	Ø 100 mm x 180 mm

TO ORDER:

References	Bar code	Colours temperatures
L030D5N1	6193102801874	Neutral white 4 000k
L030D5B1	6193102801881	Cold white 6 500k

Unit by box	Box by pallets	Units by pallets
20	50	1 500

Series LED SMD

Bulbs

BULB 40W - 230V AC

=400w

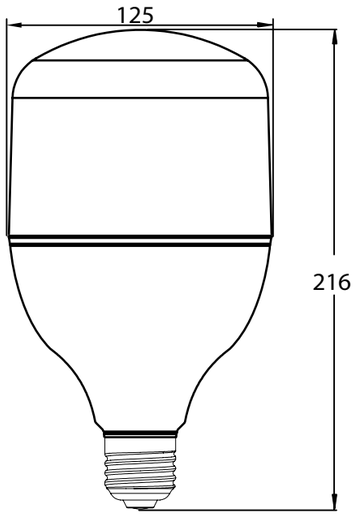

40W LED | 180-260V AC 50Hz | E27 | 4200 LUMENS | CRI ≥80 | IP40 | IK06 | PF >0,9

CHARACTERISTICS:

Power	Voltage	Cap-Base	Luminous Flux	Beam Angle
40 W	180-260V AC	E27	4 200 Lumens	165°

Energetic Class	Lifespan	Dimensions
A+	30 000 h+	Ø 125 mm x 216 mm

TO ORDER:

References	Bar code	Colours temperatures
L040D5N1	6193102803403	Neutral white 4 000k
L040D5B1	6193102803410	Cold white 6 500k

Unit by box	Box by pallets	Units by pallets
20	50	1 500

LED SMD Series

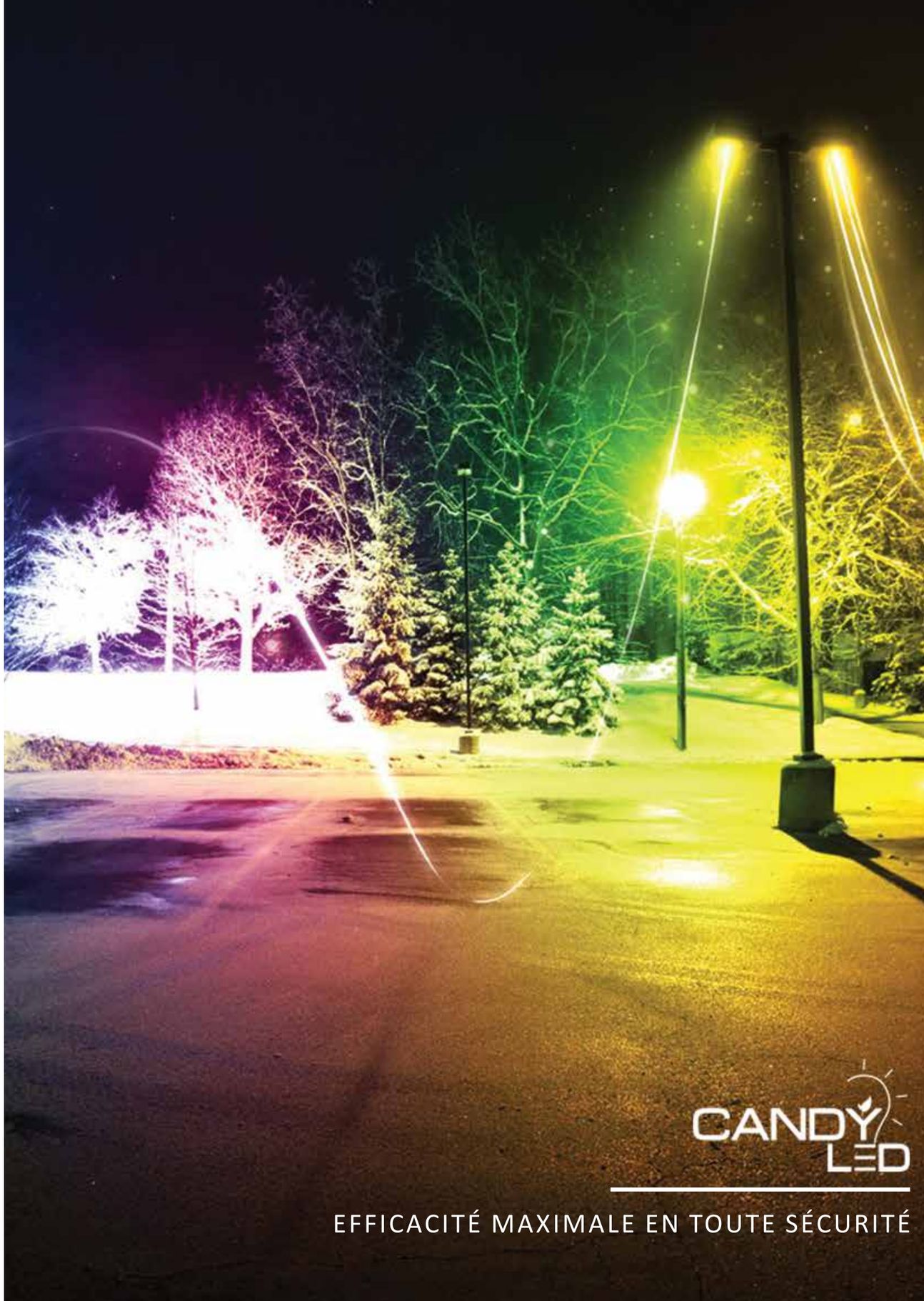

CANDY LED

CONTACT:

DISTRIBUTORS
distribution@candyled.com

Website: **www.candyled.com**

OFFICES:
Immeuble 3S, Rue Abou Hamed Ghazali, 1073 Montplaisir, Tunis, Tunisie

SHOWROOM :
Immeuble Nefissa, 31 rue des Entrepreneurs, 2035 Chargia2, Tunis, Tunisie

Tel: +216 71 120 210

PRODUCTION SITE :
Zone Industrielle Zriba, 1182 Zaghouan, Tunisie

Email: contact@candyled.com

©2023 CANDYLED
Tous droits réservés. La reproduction partielle ou totale est interdite sans l'accord écrit préalable du titulaire des droits d'auteur.
L'information présentée dans ce document est réputée être exacte et fiable et peut être changée sans notification.
Candyled est une marque déposée de Sky Industries.

® TÜV, TUEV and TUV are registered trademarks. Utilisation and application requires prior approval.

Certificate

Standard **ISO 9001:2015**

Certificate Registr. No. **01 100 2115631**

Certificate Holder: **SKY INDUSTRIES**
31 Rue des Entrepreneurs, Charguia 2
2035 Tunis
Tunisia

Scope:

Proof has been furnished by means of an audit that the requirements of ISO 9001:2015 are met.

Validity: The certificate is valid from 2021-10-27 until 2024-10-26.
First certification 2021

2021-11-01

TÜV Rheinland Cert GmbH
Am Grauen Stein · 51105 Köln

www.tuv.com

DAkkS Deutsche Akkreditierungsstelle D-ZM-16031-01-00

TÜVRheinland®
Precisely Right.

CANDY LED

Brighten your life !

Candyled - Showroom
Immeuble Nefissa
31, Rue des Entrepreneurs
2035 Charguia 2 Tunis
Tel: +216 71 120 210
Fax : +216 70 200 902
contact@candyled.com
www.candyled.com