The Candyled range of ceiling lights is designed for general lighting applications, serving as a replacement for standard light fixtures and lamps.

This range offers immediate energy savings, a long lifespan, and excellent value for money.

Installation is simple, thanks to spring clips that allow for a perfect fit within standard cut-outs.

Applications

- General lighting
- Reception areas
- Shops and offices
- Sanitary & Circulations areas
- Hospitals and clinics

Benefits

- Quick ROI
- Significant energy savings
- Lifespan: 30 000 H+
- Easy installation
- Alternatives to conventional lighting
- Wide choice of color temperature (3 000K, 4 000K & 6 500K)

CE 720lm IP20 CRI ≥80 120Lm/W UGR <19 MADE IN TUNISIA

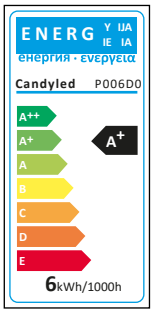

Characteristics

Nominal Power	100-265V AC 50Hz
LED Technology	SMD
Power	6W
Dimmability	Non (optional)
Luminous efficiency	720 Lumens
Color temperature	3 000 - 4 000 - 6 500K Warm White - Neutral White - Cold White
Color Rendering Index	≥80
Ingress Protection	IP20
Lifespan	30 000H+
Operating Temperature	-10°C à +50°C

Dimensions (mm)

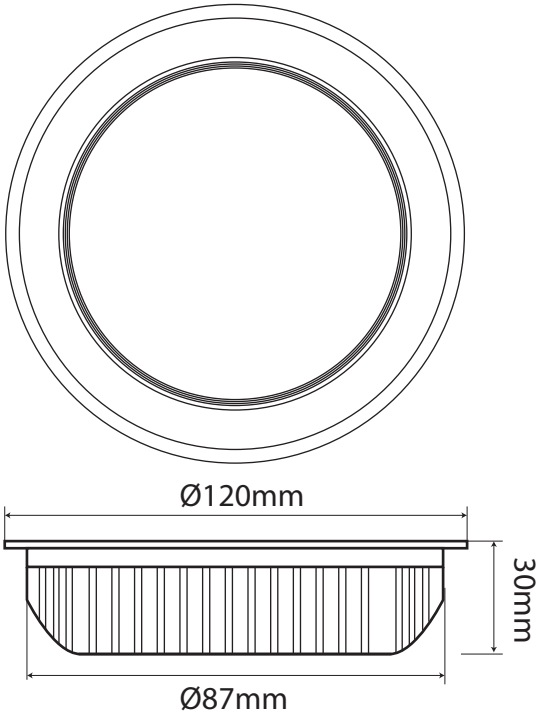

Length (mm): 120 **Width (mm):** 120 **Height (mm):** 30

Materials

Housing	Coated aluminium
Diffuser	Polycarbonate

Adresse : Immeuble 3s, Rue Abou Hamed El Ghazeli, Montplaisir, Tunis Tunisie
contact@candyled.com Tél. : +216 71 120 210 Fax : + 216 70 200 902 www.candyled.com