LUMAX 80W

CANDY LED

Street Lights Solutions

Public lighting optimization is a major challenge in terms of attractiveness safety and savings for public authorities, professionals or individuals. Candyled respond to these needs by offering a solution to reduce costs and the environmental impact.
It is the ideal solution for public lighting of high traffic roads, streets and residential lanes.
This range benefits an excellent energy efficiency, requires little maintenance and offer 5 year warranty.

>150Lm/w | IK10 | IP66 | CRI ≥75 | PF >0.95 | MADE IN TUNISIA

CE | CNAS ISO 9001 CB | RoHS Compliant

Caracteristics

Nominal Power	100-265V AC 50/60Hz
LED Technology	SMD
Power	80W
Dimmability	No (Dimmable Driver 0/1 to 10 optionnal)
Surge Protection	10Kv (20Kv optional)
Luminous efficiency	>150 Lumens/W
Luminous Flux	12 000 Lumens
Color Temperature	3 000K Warm White / 4 000K Neutral White / 6 500K Cool White
Lenses	Road optics
Color Rendering Index	≥75
Mechanical Impact Protection	IK10
Ingress Protection	IP66
Lifespan	100 000H+
Protection Class CEI	Security Class (Class II)
Operating Temperature	-10°C à +50°C

Compliance & Certifications

Certificates and Reports	CE, RoHS, CB, LM79, LM80, TM21, IEC62471, IEC60068-2-6, IEC61643-11, ISTMT, Alu Composition, ANME, CETIME
References and Standards	EN/IEC 60598-1, EN/IEC 60598-2-3, IEC62471, EN/IEC 60529, EN/IEC 62262, IEC 60068-2-75, EN/IEC 55015, EN/IEC 61000-3-2, EN/IEC 61000-3-3, EN/IEC 61547, OSPR15, ISO9227, IEC 60068-2-6, IEC 61543-11

Options

Accessories	Photocell, NEMA Connector, Waterproof connector cover, LoRaWAN IoT Controller

Materials

Luminaire body materials	High-pressure die-cast aluminium
Cover	Thermally toughened glass
Lenses	Methacrylate (PMMA)
Screws	Inox AISI 304
Sealing ring	Anti-ageing silicone gasket
Connector	IP68 waterproof
RAL	9016

Dimensions (mm)

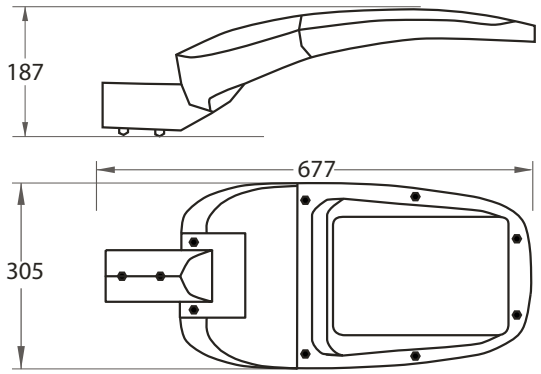

Length:677 **Width:** 305 **Height:** 187

Installation

Installation on a vertical mast	Max Ø65
Installation on a horizontal mast	Max Ø65

Inclination angle: From 0° to 90°

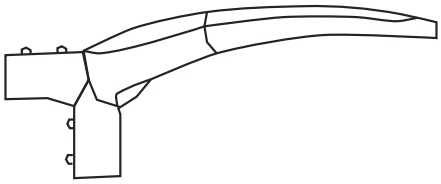

Adresse : Immeuble 3s, Rue Abou Hamed El Ghazeli, Montplaisir, Tunis Tunisie
contact@candyled.com Tél. : +216 71 120 210 Fax : + 216 70 200 902 www.candyled.com